Glass Reinforced Polyester (GRP) Jacking Pipe

Technical Guide D2.2

GRP Jacking Pipes are usually installed using trenchless technologies, the methods include: Tunnel Boring, Micro Tunnelling, Guided Auger Boring, Slip-Lining and many other non-guided traditional pipe jacking techniques.

07.23 | DRAINAGE | D2.2 SUPERLIT GRP JACKING PIPE RANGE

Applications

- Gravity sewer pipelines
- Gravity stormwater pipelines
- Road/rail culverts and service ducts
- Pipe relining solutions
- Carrier or host pipeline installations

Approvals/Standards

- GRP Jacking Pipes are designed and manufactured to ISO25780
- EPDM ± 5 Shore

We are the supply partner of choice for New Zealand's civil construction industry, specialising in water and infrastructure based solutions.

HYNDS PIPE SYSTEMS

Our Jacking Pipes are typically specified by the pipes' outside dimension (OD), additionally with the jacking load and/or pipes SN class rating which determines the pipes inside dimension (ID). Consult Tables and appendixes for full dimensions and jacking forces.

We offer pipes in standard lengths of 2.8m, custom lengths can be produced to order and to meet specific equipment drive-lengths. The pipes coupler can be made from GRP or Stainless Steel, the seal ring system is captive which can-not be dislodged during installation.

A Stainless Steel coupling of 2mm thickness is required for PN1 pressure applications, and 2.5mm thickness is used for PN6 and PN10 pressure classes. (Fig 2)

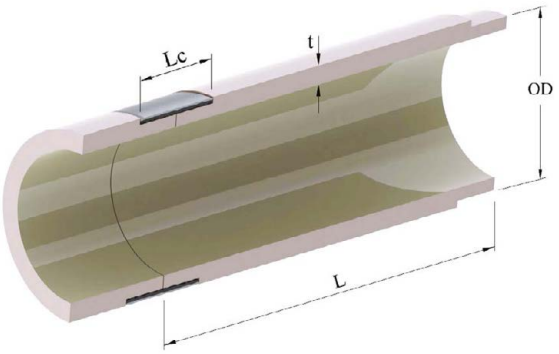

FIG. 1 Pipe section view

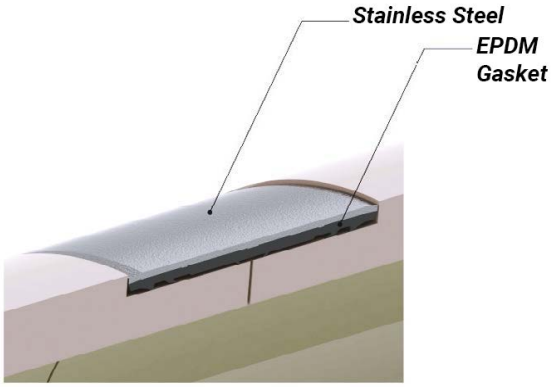

FIG. 2 Stainless Steel (SS) Coupling sectional view
Coupling: Stainless Steel (304 or 316) and GRP
Gasket: EPDM 60±5 Shore

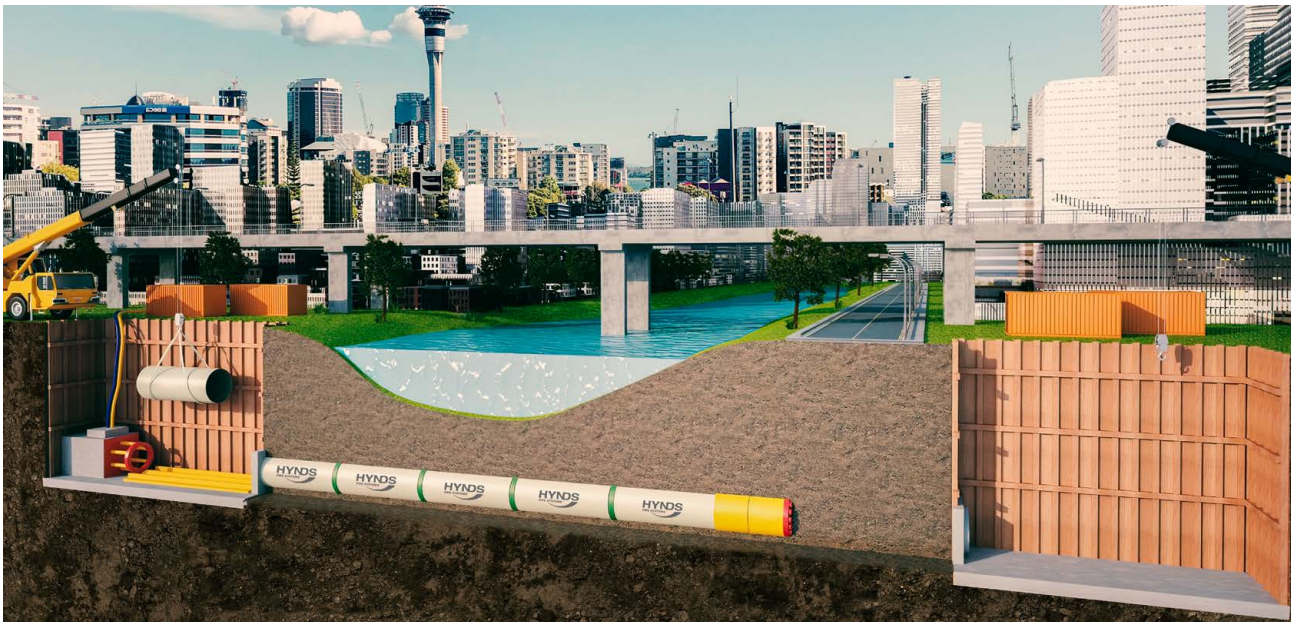

FIG. 3 Typical installation of GRP pipes using Micro Tunnelling (with TBM), via launch and retrieval shafts.

GRP Pipe Manufacturing Processes

Continuous Filament Winding (CFW)

The production principle is based on a continuous process taking place on a rotating mold created from a continuous steel band. All manufacturing parameters and product characteristics are tightly controlled, with multiple sensors and cameras monitoring the entire production process. (Fig 4 & 5)

Centrifugal Casting (CC)

Requires raw materials to be introduced layer by layer into a heated rotating mold, with centrifugal forces reaching up to 80g. State of the art software enables pipe parameters to be set via simple computer interface. (Fig 6 & 7)

Material

Standard Superlit® GRP Pipes are manufactured using orthophthalic or telephthalic unsaturated polyester resin. In the case of special design requirements to meet specific conditions of the project, it is possible to manufacture using isophthalic and vinyl ester resin.

For more information visit

https://www.superlit.com/en/products-and-services/special-applications/#jacking-pipes

FIG. 4 Continuous Filament Winding (CFW) pipe manufacturing process

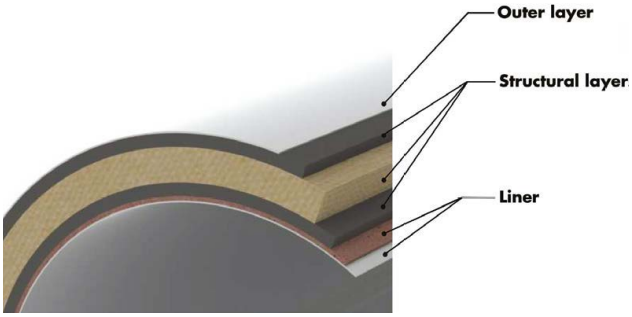

FIG. 5 Continuous Filament Winding (CFW) wall section layers

FIG. 6 Centrifugal Casting (CC) manufacturing process.

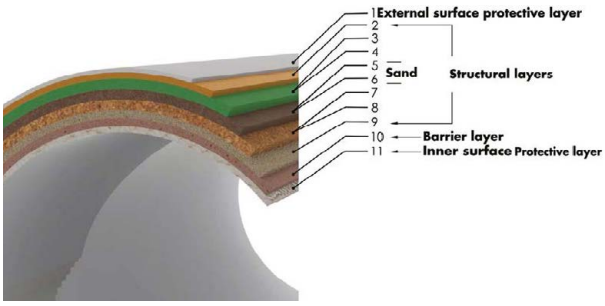

FIG. 7 Centrifugal Casting (CC) wall section layers.

GRP Jacking Datasheet

CONTINUOUS FILAMENT WINDING (CFW)

GLASS REINFORCED POLYESTER (GRP) ISO 25780

JOINT TYPE : FULLFACE STAINLESS STEEL JACKING COUPLING

TABLE 1 GRP JACKING PIPE TABLE: SN 20 000 - 80 000

OD (mm)	PIPE STIFFNESS (N/m²)																							
	20 000				32 000				40 000				50 000				64 000				80 000			
	ID	e	Mass	F max	ID	e	Mass	F max	ID	e	Mass	F max	ID	e	Mass	F max	ID	e	Mass	F max	ID	e	Mass	F max
	mm	mm	kg / m	kN	mm	mm	kg / m	kN	mm	mm	kg / m	kN	mm	mm	kg / m	kN	mm	mm	kg / m	kN	mm	mm	kg / m	kN
345	326,4	9,3	20	18	323,5	10,8	23	50	321,8	11,6	24	69	319,4	12,8	27	96	317,2	13,9	29	120	315,2	14,9	31	141
376	355,8	10,1	23	39	352,6	11,7	27	78	350,6	12,7	29	102	348,0	14,0	32	133	345,8	15,1	34	160	343,6	16,2	37	186
427	404,0	11,5	30	84	400,4	13,3	35	133	398,0	14,5	38	166	395,4	15,8	41	202	392,8	17,1	44	237	390,2	18,4	47	272
478	452,2	12,9	38	138	448,0	15,0	44	203	445,6	16,2	47	240	442,6	17,7	51	285	440,8	18,6	54	313	436,8	20,6	59	373
515	487,2	13,9	44	183	482,8	16,1	50	256	480,0	17,5	55	302	476,8	19,1	59	355	474,6	20,2	63	390	470,4	22,3	69	459
530	501,6	14,2	46	198	497,0	16,5	53	277	494,0	18,0	58	328	490,8	19,6	63	382	487,4	21,3	68	439	484,4	22,8	73	489
550	520,4	14,8	50	228	515,7	17,2	57	311	513,0	18,5	62	359	509,2	20,4	68	426	505,8	22,1	73	485	502,6	23,7	78	540
618	584,8	16,6	63	330	579,5	19,3	72	435	576,0	21,0	79	505	572,2	22,9	86	580	568,4	24,8	92	654	565,0	26,5	98	720
650	615,0	17,5	70	385	609,0	20,5	81	511	606,0	22,0	87	574	601,8	24,1	95	661	597,8	26,1	102	743	594,0	28,0	109	821
718	679,6	19,2	84	459	673,0	22,5	98	612	669,6	24,2	105	690	664,8	26,6	115	800	660,4	28,8	125	900	656,0	31,0	134	1.000
760	718,0	21,0	97	576	712,6	23,7	110	708	708,8	25,6	118	801	703,6	28,2	130	927	699,0	30,5	140	1.038	694,4	32,8	150	1.148
820	776,0	22,0	110	676	769,0	25,5	127	862	764,6	27,7	138	978	759,2	30,4	151	1.119	754,0	33,0	163	1.254	749,4	35,3	174	1.373
860	814,0	23,0	121	767	806,0	27,0	141	989	802,0	29,0	151	1.099	796,4	31,8	165	1.253	790,8	34,6	179	1.406	785,8	37,1	192	1.541
924	874,0	25,0	141	853	866,0	29,0	163	1.092	862,0	31,0	174	1.211	855,6	34,2	191	1.399	850,0	37,0	206	1.563	844,0	40,0	222	1.738
960	908,0	26,0	153	950	900,0	30,0	175	1.198	895,0	32,5	189	1.352	889,0	35,5	206	1.536	883,0	38,5	223	1.718	877,0	41,5	239	1.900
1.026	971,0	27,5	172	1.118	962,0	32,0	200	1.417	957,0	34,5	215	1.581	950,0	38,0	236	1.810	943,6	41,2	255	2.018	938,0	44,0	271	2.199
1.099	1.040,0	29,5	198	1.344	1.030,0	34,5	231	1.699	1.025,0	37,0	247	1.875	1.017,6	40,7	270	2.135	1.011,0	44,0	292	2.364	1.004,0	47,5	314	2.607
1.127	1.066,6	30,2	208	1.431	1.056,2	35,4	243	1.810	1.051,0	38,0	260	1.998	1.043,0	42,0	286	2.285	1.036,6	45,2	307	2.513	1.029,8	48,6	329	2.754
1.229	1.163,0	33,0	248	1.789	1.153,0	38,0	284	2.187	1.146,0	41,5	309	2.463	1.138,0	45,5	338	2.776	1.130,2	49,4	366	3.080	1.123,0	53,0	391	3.358
1.290	1.220,0	35,0	276	2.049	1.209,0	40,5	318	2.508	1.202,4	43,8	343	2.781	1.194,4	47,8	373	3.110	1.186,6	51,7	402	3.428	1.178,4	55,8	432	3.761
1.348	1.275,0	36,5	301	2.276	1.264,0	42,0	344	2.755	1.257,0	45,5	372	3.058	1.248,0	50,0	408	3.445	1.240,0	54,0	439	3.786	1.231,6	58,2	471	4.143
1.399	1.323,4	37,8	323	2.483	1.311,4	43,8	373	3.026	1.304,2	47,4	402	3.349	1.295,0	52,0	440	3.759	1.286,6	56,2	474	4.131	1.278,2	60,4	508	4.501
1.434	1.357,0	38,5	337	2.613	1.344,0	45,0	393	3.216	1.337,0	48,5	422	3.538	1.327,6	53,2	461	3.967	1.318,8	57,6	498	4.367	1.310,0	62,0	534	4.764
1.499	1.418,6	40,2	368	2.901	1.405,0	47,0	429	3.560	1.398,0	50,5	459	3.897	1.388,0	55,5	503	4.375	1.379,0	60,0	542	4.802	1.369,0	65,0	585	5.274
1.536	1.453,4	41,3	388	2.982	1.439,6	48,2	450	3.667	1.432,0	52,0	485	4.041	1.422,0	57,0	529	4.531	1.412,0	62,0	574	5.017	1.402,0	67,0	618	5.500
1.638	1.550,0	44,0	440	3.474	1.536,0	51,0	508	4.216	1.527,0	55,5	552	4.689	1.516,0	61,0	604	5.263	1.506,4	65,8	650	5.761	1.496,0	71,0	699	6.297
1.720	1.628,0	46,0	484	3.878	1.612,0	54,0	565	4.768	1.603,2	58,4	609	5.253	1.592,0	64,0	666	5.867	1.582,0	69,0	715	6.412	1.572,0	74,0	765	6.953
1.842	1.743,0	49,5	557	4.582	1.726,0	58,0	650	5.594	1.717,0	62,5	698	6.126	1.705,0	68,5	763	6.831	1.694,0	74,0	822	7.472	1.683,0	79,5	880	8.109
1.944	1.839,4	52,3	621	5.199	1.822,0	61,0	721	6.292	1.812,0	66,0	778	6.916	1.800,0	72,0	846	7.659	1.787,0	78,5	920	8.459	1.774,0	85,0	992	9.254
2.046	1.936,0	55,0	688	5.840	1.918,0	64,0	797	7.031	1.907,0	69,5	863	7.753	1.894,0	76,0	940	8.600	1.882,0	82,0	1.011	9.378	1.870,0	88,0	1.082	10.150
2.160	2.044,0	58,0	766	6.305	2.026,0	67,0	881	7.562	2.014,0	73,0	957	8.394	2.000,0	80,0	1.045	9.358	1.987,0	86,5	1.126	10.248				
2.250	2.129,0	60,5	832	6.943	2.110,0	70,0	958	8.325	2.097,0	76,5	1.044	9.263	2.083,0	83,5	1.136	10.267	2.069,6	90,2	1.223	11.222				
2.453	2.321,0	66,0	989	8.469	2.300,0	76,5	1.142	10.134	2.286,0	83,5	1.243	11.235	2.273,0	90,0	1.336	12.252								
2.553	2.416,0	68,5	1.069	9.241	2.393,0	80,0	1.242	11.138	2.379,0	87,0	1.347	12.285	2.369,0	92,0	1.422	13.099								
2.658	2.514,5	71,5	1.161	10.150	2.492,5	82,5	1.334	12.040	2.477,5	90,0	1.451	13.319												
2.758	2.610,0	74,0	1.247	10.995	2.586,6	85,7	1.438	13.081																
2.858	2.704,0	77,0	1.345	11.964	2.680,4	88,8	1.544	14.144																
2.962	2.803,0	79,5	1.439	12.895																				
3.065	2.901,0	82,0	1.536	13.856																				

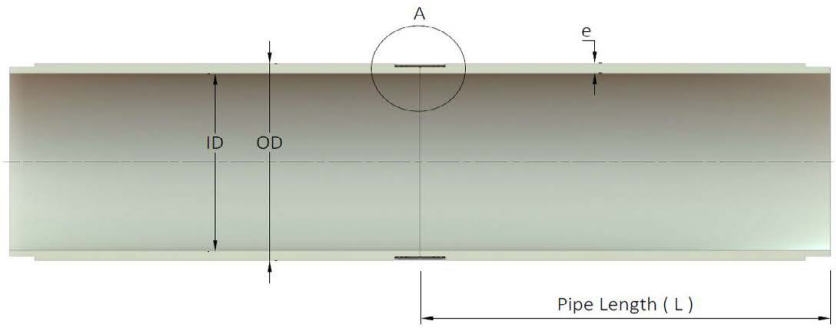

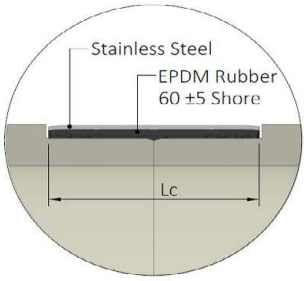

Detail A

Lc = 120 mm (OD: 345 – 860 mm)
Lc = 140 mm (OD: 924 – 1434 mm)
Lc = 170 mm (OD: 1499 – 3065 mm)

GRP Jacking Datasheet

CONTINUOUS FILAMENT WINDING (CFW)

GLASS REINFORCED POLYESTER (GRP) ISO 25780

JOINT TYPE : FULLFACE STAINLESS STEEL JACKING COUPLING

TABLE 2 GRP JACKING PIPE TABLE: SN 100 000 - 1 000 000

OD (mm)	PIPE STIFFNESS (N/m²)																											
	100 000				128 000				160 000				200 000				320 000				640 000				1 000 000			
	ID	e	Mass	F max	ID	e	Mass	F max	ID	e	Mass	F max	ID	e	Mass	F max	ID	e	Mass	F max	ID	e	Mass	F max	ID	e	Mass	F max
	mm	mm	kg / m	kN	mm	mm	kg / m	kN	mm	mm	kg / m	kN	mm	mm	kg / m	kN	mm	mm	kg / m	kN	mm	mm	kg / m	kN	mm	mm	kg / m	kN
345	312,6	16,2	33	169	310,0	17,5	36	197	306,8	19,1	39	231	304,0	20,5	42	260	296,8	24,1	49	334	285,4	29,8	59	448	276,6	34,2	67	533
376	340,8	17,6	40	219	338,0	19,0	43	251	334,4	20,8	46	293	331,0	22,5	50	331	323,4	26,3	58	417	311,0	32,5	70	552	301,6	37,2	79	651
427	387,0	20,0	51	315	384,0	21,5	55	354	379,8	23,6	60	409	376,0	25,5	64	459	367,4	29,8	74	568	353,2	36,9	90	744	342,4	42,3	102	873
478	433,2	22,4	64	427	429,6	24,2	69	480	425,0	26,5	75	547	421,0	28,5	80	605	411,2	33,4	93	745	395,4	41,3	113	964	383,4	47,3	128	1.124
515	466,6	24,2	75	520	462,8	26,1	80	580	457,4	28,8	88	666	453,6	30,7	93	725	443,0	36,0	108	888	426,0	44,5	131	1.141	413,0	51,0	149	1.329
530	480,4	24,8	79	556	476,4	26,8	85	621	471,2	29,4	92	706	467,0	31,5	99	773	456,0	37,0	115	948	438,4	45,8	139	1.218	425,0	52,5	157	1.416
550	498,4	25,8	85	612	494,2	27,9	91	684	489,0	30,5	100	772	484,8	32,6	106	842	473,0	38,5	124	1036	455,0	47,5	150	1.322	441,0	54,5	170	1.537
618	560,0	29,0	107	817	555,2	31,4	116	909	549,6	34,2	125	1.015	544,6	36,7	134	1.109	531,6	43,2	156	1349	511,0	53,5	190	1.717	496,0	61,0	213	1.976
650	589,0	30,5	119	923	584,0	33,0	128	1.023	578,0	36,0	139	1.143	572,8	38,6	148	1.245	559,2	45,4	172	1510	537,6	56,2	210	1.916	521,4	64,3	237	2.210
718	651,0	33,5	144	1.112	645,2	36,4	156	1.241	638,0	40,0	170	1.399	632,8	42,6	181	1.513	617,6	50,2	211	1839	594,0	62,0	255	2.329	576,0	71,0	288	2.691
760	688,8	35,6	162	1.281	682,8	38,6	175	1.422	675,0	42,5	192	1.604	669,6	45,2	203	1.728	653,8	53,1	236	2087	628,8	65,6	286	2.637	609,4	75,3	324	3.049
820	743,0	38,5	189	1.537	736,8	41,6	203	1.694	729,2	45,4	221	1.885	722,4	48,8	236	2.054	705,4	57,3	274	2471	678,0	71,0	334	3.121	658,0	81,0	376	3.580
860	779,6	40,2	207	1.707	773,0	43,5	223	1.883	764,4	47,8	244	2.110	758,0	51,0	259	2.277	740,0	60,0	301	2740	711,0	74,5	368	3.462				
924	837,2	43,4	240	1.934	830,2	46,9	258	2.134	821,6	51,2	281	2.378	814,0	55,0	300	2.591	795,0	64,5	348	3116	764,0	80,0	424	3.945				
960	869,8	45,1	259	2.115	862,8	48,6	278	2.324	853,6	53,2	303	2.594	845,6	57,2	324	2.828	826,0	67,0	376	3390	794,0	83,0	457	4.279				
1.026	930,0	48,0	295	2.456	922,0	52,0	318	2.710	912,0	57,0	347	3.024	904,0	61,0	370	3.274	882,4	71,8	430	3936								
1.099	995,8	51,6	339	2.888	988,2	55,4	363	3.147	977,0	61,0	398	3.524	968,6	65,2	423	3.805	945,4	76,8	493	4567								
1.127	1.021,2	52,9	357	3.057	1.013,0	57,0	383	3.343	1.002,0	62,5	418	3.724	992,6	67,2	447	4.045	969,4	78,8	519	4826								
1.229	1.114,0	57,5	423	3.704	1.104,6	62,2	456	4.061	1.093,0	68,0	496	4.499	1.082,6	73,2	531	4.887												
1.290	1.169,0	60,5	467	4.140	1.160,0	65,0	500	4.499	1.147,0	71,5	547	5.014	1.136,0	77,0	587	5.445												
1.348	1.221,6	63,2	510	4.563	1.211,0	68,5	550	5.006	1.198,0	75,0	600	5.543	1.187,0	80,5	641	5.993												
1.399	1.267,8	65,6	549	4.955	1.257,0	71,0	592	5.423	1.243,0	78,0	647	6.024	1.232,0	83,5	690	6.491												
1.434	1.299,2	67,4	578	5.247	1.289,0	72,5	620	5.700	1.274,8	79,6	677	6.325	1.264,0	85,0	720	6.795												
1.499	1.359,0	70,0	628	5.742	1.348,0	75,5	675	6.253	1.333,0	83,0	738	6.943	1.321,0	89,0	788	7.489												
1.536	1.392,0	72,0	662	5.979	1.380,0	78,0	714	6.550	1.366,0	85,0	775	7.210																
1.638	1.485,0	76,5	750	6.859	1.472,0	83,0	811	7.519	1.460,0	89,0	866	8.122																
1.720	1.559,0	80,5	829	7.651	1.546,0	87,0	892	8.344																				
1.842	1.670,0	86,0	948	8.857																								

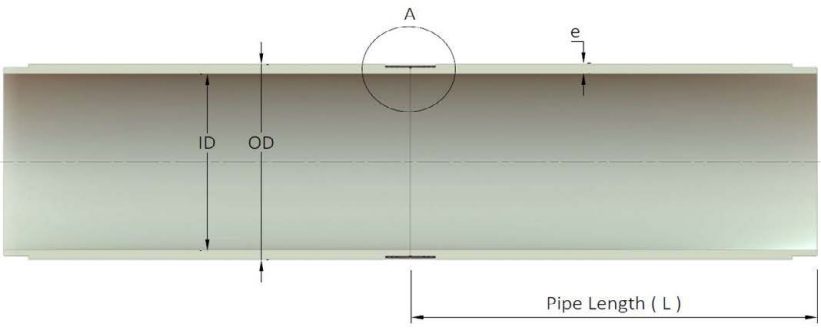

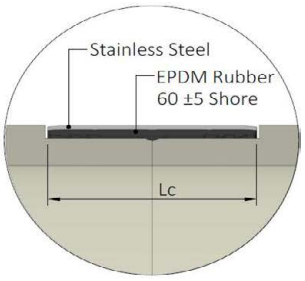

Detail A

Lc = 120 mm (OD: 345 – 860 mm)
Lc = 140 mm (OD: 924 – 1434 mm)
Lc = 170 mm (OD: 1499 – 3065 mm)

CENTRIFUGAL CASTING (CC)

GLASS REINFORCED POLYESTER (GRP) ISO 25780

JOINT TYPE : FULLFACE GRP JACKING COUPLING

TABLE 3 GRP JACKING PIPE TABLE: SN 32 000 - 640 000

OD (mm)	PIPE STIFFNESS SN (N/m²)																							
	32 000				40 000				50 000				64 000				80 000				100 000			
	ID	e	Mass	F max	ID	e	Mass	F max	ID	e	Mass	F max	ID	e	Mass	F max	ID	e	Mass	F max	ID	e	Mass	F max
	mm	mm	kg / m	kN	mm	mm	kg / m	kN	mm	mm	kg / m	kN	mm	mm	kg / m	kN	mm	mm	kg / m	kN	mm	mm	kg / m	kN
427	X	X	X	X	X	X	X	X	393,6	16,7	40	164	391,4	17,8	42	195	388,8	19,1	46	232	386,0	20,5	49	272
530	X	X	X	X	491,6	19,2	57	298	489,2	20,4	61	341	486,0	22,0	66	397	482,8	23,6	71	454	479,4	25,3	76	513
616	574,8	20,6	71	408	571,6	22,2	77	475	568,6	23,7	83	537	565,0	25,5	89	611	561,4	27,3	96	685	557,2	29,4	104	770
718	670,4	23,8	97	636	666,6	25,7	105	728	663,0	27,5	113	815	658,8	29,6	122	916	654,4	31,8	131	1.021	649,4	34,3	142	1.140
820	765,8	27,1	128	863	761,6	29,2	139	980	757,4	31,3	149	1.096	752,4	33,8	162	1.233	747,2	36,4	174	1.375	741,6	39,2	188	1.526
924	863,2	30,4	160	1.114	858,4	32,8	173	1.264	853,6	35,2	186	1.414	848,0	38,0	202	1.587	842,4	40,8	218	1.759	836,0	44,0	235	1.954
1.026	959,0	33,5	196	1.460	953,8	36,1	212	1.641	948,4	38,8	229	1.827	942,0	42,0	248	2.047	935,6	45,2	268	2.266	928,8	48,6	288	2.496
1.229	1.149,2	39,9	280	2.300	1.143,2	42,9	302	2.550	1.136,8	46,1	326	2.815	1.129,4	49,8	353	3.120	1.121,6	53,7	382	3.439	X	X	X	X
1.434	1.341,8	46,1	379	3.309	1.334,6	49,7	409	3.659	1.327,2	53,4	442	4.017	X	X	X	X	X	X	X	X	X	X	X	X

OD (mm)	PIPE STIFFNESS SN (N/m²)																			
	128 000				160 000				200 000				320 000				640 000			
	ID	e	Mass	F max	ID	e	Mass	F max	ID	e	Mass	F max	ID	e	Mass	F max	ID	e	Mass	F max
	mm	mm	kg / m	kN	mm	mm	kg / m	kN	mm	mm	kg / m	kN	mm	mm	kg / m	kN	mm	mm	kg / m	kN
427	382,8	22,1	53	316	379,6	23,7	57	361	376,0	25,5	62	410	367,4	29,8	73	526	352,6	37,2	92	720
530	475,2	27,4	83	586	471,0	29,5	89	658	466,6	31,7	96	733	455,8	37,1	114	914	436,8	46,6	144	1.223
616	552,4	31,8	112	867	547,6	34,2	121	963	542,4	36,8	131	1.066	529,6	43,2	155	1.315	X	X	X	X
718	643,8	37,1	154	1.271	638,2	39,9	166	1.402	631,8	43,1	179	1.549	616,4	50,8	213	1.899	X	X	X	X
820	735,2	42,4	204	1.698	728,4	45,8	221	1.879	721,2	49,4	239	2.069	X	X	X	X	X	X	X	X
924	828,6	47,7	255	2.178	821,4	51,3	276	2.394	X	X	X	X	X	X	X	X	X	X	X	X
1.026	920,8	52,6	313	2.765	X	X	X	X	X	X	X	X	X	X	X	X	X	X	X	X
1.229	X	X	X	X	X	X	X	X	X	X	X	X	X	X	X	X	X	X	X	X
1.434	X	X	X	X	X	X	X	X	X	X	X	X	X	X	X	X	X	X	X	X

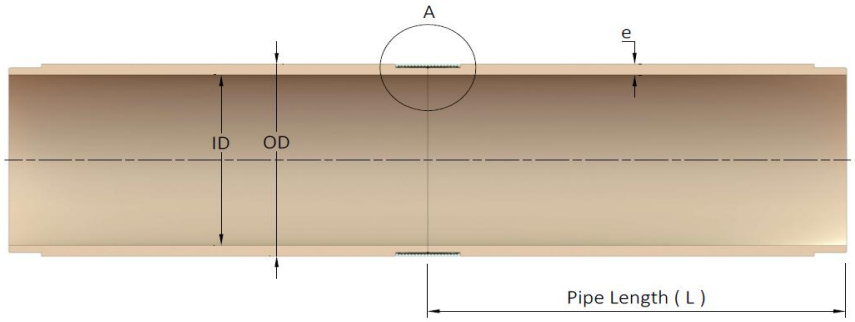

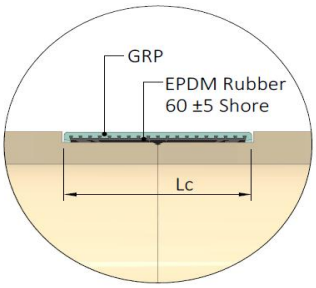

Detail A

Lc = 148 mm (OD: 427 – 1434 mm)

CENTRIFUGAL CASTING (CC)

GLASS REINFORCED POLYESTER (GRP) ISO 25780

JOINT TYPE : FULLFACE STAINLESS STEEL JACKING COUPLING

TABLE 4 GRP JACKING TABLE: LOAD 50 - 200 TONS

JACKING LOAD Gj (tons)	OD (mm)	ID (mm)	e (mm)	SN (N/m²)
50	427	381,0	23,0	132.958
	530	490,4	19,8	41.449
	616	580,0	18,0	19.551
	718	683,0	17,5	11.045

JACKING LOAD Gj (tons)	OD (mm)	ID (mm)	e (mm)	SN (N/m²)
100	530	465,0	32,5	195.884
	616	558,8	28,6	85.094
	718	665,0	26,5	41.201
	820	771,8	24,1	21.060
	924	877,4	23,3	13.400

JACKING LOAD Gj (tons)	OD (mm)	ID (mm)	e (mm)	SN (N/m²)
150	530	438,2	45,9	568.799
	616	536,6	39,7	228.070
	718	646,6	35,7	104.346
	820	755,8	32,1	49.975
	924	863,4	30,3	29.765
	1.026	969,8	28,1	17.947
	1.229	1.179,2	24,9	7.794

JACKING LOAD Gj (tons)	OD (mm)	ID (mm)	e (mm)	SN (N/m²)
200	616	513,4	51,3	493.408
	718	627,6	45,2	212.037
	820	739,6	40,2	99.380
	924	849,2	37,4	56.705
	1.026	957,2	34,4	32.908
	1.229	1.168,8	30,1	13.890
	1.434	1.379,8	27,1	6.353

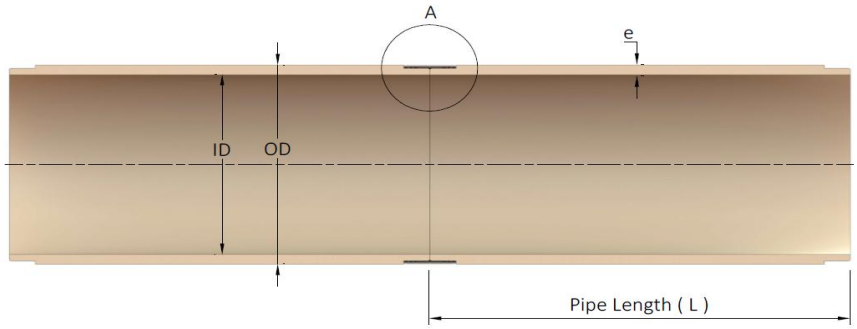

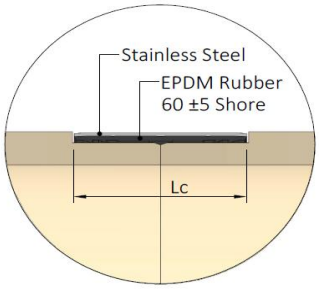

Detail A

Lc = 120 mm (OD: 427 – 820 mm)
Lc = 140 mm (OD: 924 – 1434 mm)

GRP Jacking Datasheet

CONTINUOUS FILAMENT WINDING (CFW)

GLASS REINFORCED POLYESTER (GRP) ISO 25780

JOINT TYPE : FULLFACE GRP JACKING COUPLING

TABLE 5 GRP JACKING PIPE TABLE: LOAD 200 - 400 TONS

JACKING LOAD Gj (tons)	OD (mm)	ID (mm)	e (mm)	Mass (kg/m)	SN (N/m²)
200	618	504,0	57,0	201	908.614
	650	538,0	56,0	209	725.852
	718	616,0	51,0	214	387.236
	760	664,0	48,0	215	265.416
	820	728,0	46,0	224	181.842
	860	769,0	45,5	233	151.009
	924	838,0	43,0	238	100.721
	960	877,0	41,5	239	79.901
	1.026	946,0	40,0	248	57.835
	1.099	1.023,0	38,0	253	39.797
	1.127	1.053,0	37,0	253	33.882
	1.229	1.159,0	35,0	262	21.819
	1.290	1.222,0	34,0	268	17.183
	1.348	1.282,0	33,0	273	13.690
	1.399	1.335,0	32,0	275	11.112
	1.434	1.370,0	32,0	282	10.300

JACKING LOAD Gj (tons)	OD (mm)	ID (mm)	e (mm)	Mass (kg/m)	SN (N/m²)
300	760	624,0	68,0	296	821.962
	820	692,0	64,0	304	525.555
	860	735,0	62,5	313	416.957
	924	807,0	58,5	318	267.491
	960	846,0	57,0	323	217.874
	1.026	918,0	54,0	330	148.534
	1.099	997,0	51,0	336	99.832
	1.127	1.028,0	49,5	335	83.986
	1.229	1.136,0	46,5	345	52.674
	1.290	1.200,0	45,0	352	40.905
	1.348	1.262,0	43,0	352	30.990
	1.399	1.315,0	42,0	358	25.683
	1.434	1.351,0	41,5	363	22.930
	1.499	1.419,0	40,0	367	17.851
	1.536	1.448,0	44,0	412	22.217
	1.638	1.551,0	43,5	436	17.589
	1.720	1.634,0	43,0	453	14.603
	1.842	1.756,0	43,0	486	11.829
	1.944	1.858,0	43,0	513	10.025

JACKING LOAD Gj (tons)	OD (mm)	ID (mm)	e (mm)	Mass (kg/m)	SN (N/m²)
400	924	774,0	75,0	400	597.178
	960	816,0	72,0	402	461.745
	1.026	890,0	68,0	409	309.794
	1.099	971,0	64,0	416	204.815
	1.127	1.003,0	62,0	415	170.911
	1.229	1.113,0	58,0	427	105.258
	1.290	1.178,0	56,0	434	80.958
	1.348	1.240,0	54,0	439	62.954
	1.399	1.295,0	52,0	440	49.837
	1.434	1.332,0	51,0	443	43.440
	1.499	1.401,0	49,0	446	33.429
	1.536	1.430,0	53,0	494	39.541
	1.638	1.534,0	52,0	518	30.531
	1.720	1.622,0	49,0	514	21.842
	1.842	1.748,0	47,0	530	15.550
	1.944	1.852,0	46,0	548	12.332
	2.046	1.954,0	46,0	578	10.540

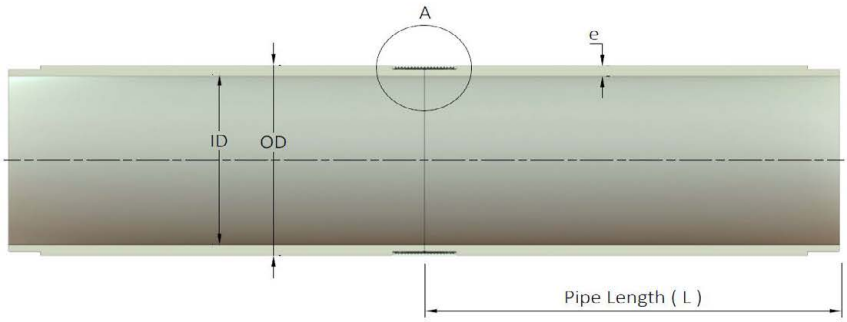

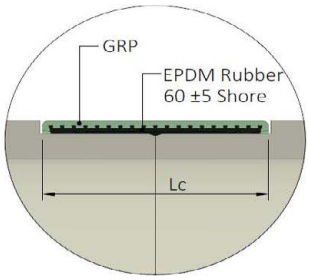

Detail A

Lc = 148 mm (OD: 345 – 1499 mm)
Lc =180 mm (OD: 1536 – 3065mm)

GRP Jacking Datasheet

CONTINUOUS FILAMENT WINDING (CFW)

GLASS REINFORCED POLYESTER (GRP) ISO 25780

JOINT TYPE : FULLFACE GRP JACKING COUPLING

TABLE 6 GRP JACKING PIPE TABLE: LOAD 500 - 700 TONS

JACKING LOAD Gj (tons)	OD (mm)	ID (mm)	e (mm)	Mass (kg/m)	SN (N/m^2)
500	1.099	945,0	77,0	494	352.836
	1.127	977,0	75,0	495	298.944
	1.229	1.090,0	69,5	506	177.663
	1.290	1.157,0	66,5	511	132.467
	1.348	1.220,0	64,0	516	102.164
	1.399	1.275,0	62,0	521	82.269
	1.434	1.312,0	61,0	526	72.349
	1.499	1.382,0	58,5	529	55.256
	1.536	1.412,0	62,0	574	61.396
	1.638	1.518,0	60,0	595	45.351
	1.720	1.606,0	57,0	595	33.220
	1.842	1.734,0	54,0	606	22.727
	1.944	1.840,0	52,0	618	17.128
	2.046	1.945,0	50,5	633	13.371
	2.160	2.062,0	49,0	650	10.318

JACKING LOAD Gj (tons)	OD (mm)	ID (mm)	e (mm)	Mass (kg/m)	SN (N/m^2)
600	1.229	1.067,0	81,0	584	289.790
	1.290	1.134,0	78,0	594	219.902
	1.348	1.198,0	75,0	600	168.715
	1.399	1.255,0	72,0	600	131.777
	1.434	1.292,0	71,0	608	116.612
	1.499	1.363,0	68,0	611	88.524
	1.536	1.394,0	71,0	653	93.911
	1.638	1.500,0	69,0	680	70.167
	1.720	1.590,0	65,0	676	49.980
	1.842	1.718,0	62,0	693	34.863
	1.944	1.826,0	59,0	698	25.297
	2.046	1.932,0	57,0	712	19.417
	2.160	2.050,0	55,0	727	14.716
	2.250	2.144,0	53,0	731	11.582
	2.453	2.341,0	56,0	843	11.046

JACKING LOAD Gj (tons)	OD (mm)	ID (mm)	e (mm)	Mass (kg/m)	SN (N/m^2)
700	1.399	1.234,0	82,5	682	192.875
	1.434	1.273,0	80,5	684	164.889
	1.499	1.345,0	77,0	688	124.437
	1.536	1.375,0	80,5	736	132.595
	1.638	1.484,0	77,0	755	94.068
	1.720	1.574,0	73,0	755	68.244
	1.842	1.704,0	69,0	768	46.195
	1.944	1.812,0	66,0	778	34.019
	2.046	1.918,0	64,0	797	26.388
	2.160	2.038,0	61,0	804	19.237
	2.250	2.132,0	59,0	812	15.304
	2.453	2.331,0	61,0	916	13.682
	2.553	2.431,0	61,0	955	12.100
	2.658	2.535,5	61,0	995	10.697

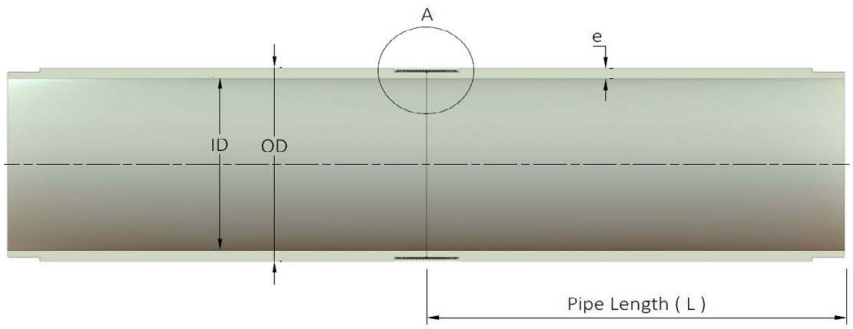

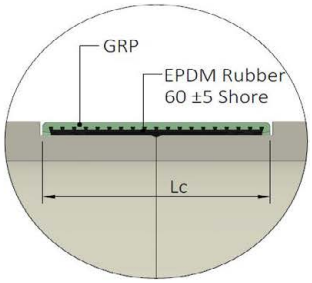

Detail A

Lc = 148 mm (OD: 345 – 1499 mm)
Lc =180 mm (OD: 1536 – 3065mm)

GRP Jacking Datasheet

CONTINUOUS FILAMENT WINDING (CFW)

GLASS REINFORCED POLYESTER (GRP) ISO 25780

JOINT TYPE : FULLFACE GRP JACKING COUPLING

TABLE 7 GRP JACKING PIPE TABLE :LOAD 800 - 1400 TONS

JACKING LOAD Gj (tons)	OD (mm)	ID (mm)	e (mm)	Mass (kg/m)	SN (N/m^2)
800	1.499	1.325,0	87,0	771	183.329
	1.536	1.357,0	89,5	813	185.648
	1.638	1.466,0	86,0	838	133.351
	1.720	1.558,0	81,0	834	94.601
	1.842	1.688,0	77,0	853	65.075
	1.944	1.797,0	73,5	863	47.552
	2.046	1.904,0	71,0	881	36.413
	2.160	2.024,0	68,0	893	26.917
	2.250	2.118,0	66,0	905	21.630
	2.453	2.319,0	67,0	1.004	18.267
	2.553	2.421,0	66,0	1.031	15.419
	2.658	2.525,5	66,0	1.074	13.628
	2.758	2.628,0	65,0	1.099	11.601
	2.858	2.728,0	65,0	1.140	10.399

JACKING LOAD Gj (tons)	OD (mm)	ID (mm)	e (mm)	Mass (kg/m)	SN (N/m^2)
1000	1.842	1.658,0	92,0	1.011	107.881
	1.944	1.768,0	88,0	1.026	79.143
	2.046	1.878,0	84,0	1.035	58.269
	2.160	1.998,0	81,0	1.058	43.912
	2.250	2.092,0	79,0	1.077	35.777
	2.453	2.293,0	80,0	1.192	30.030
	2.553	2.401,0	76,0	1.182	22.638
	2.658	2.509,5	74,0	1.201	18.418
	2.758	2.614,0	72,0	1.215	15.096
	2.858	2.718,0	70,0	1.226	12.405
	2.962	2.822,0	70,0	1.271	11.114
	3.065	2.925,0	70,0	1.317	10.006

JACKING LOAD Gj (tons)	OD (mm)	ID (mm)	e (mm)	Mass (kg/m)	SN (N/m^2)
1200	2.250	2.070,0	90,0	1.221	53.711
	2.453	2.275,0	89,0	1.321	41.822
	2.553	2.379,0	87,0	1.347	34.416
	2.658	2.487,5	85,0	1.373	28.273
	2.758	2.592,0	83,0	1.394	23.412
	2.858	2.698,0	80,0	1.396	18.718
	2.962	2.806,0	78,0	1.413	15.505
	3.065	2.913,0	76,0	1.427	12.884

JACKING LOAD Gj (tons)	OD (mm)	ID (mm)	e (mm)	Mass (kg/m)	SN (N/m^2)
1400	2.758	2.574,0	92,0	1.540	32.208
	2.858	2.680,0	89,0	1.548	26.024
	2.962	2.788,0	87,0	1.571	21.718
	3.065	2.897,0	84,0	1.573	17.536

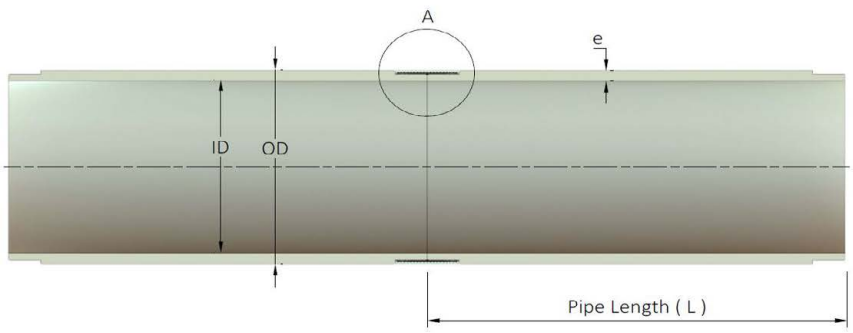

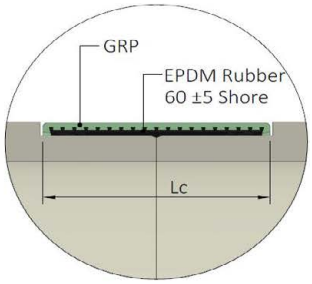

Detail A

Lc = 148 mm (OD: 345 – 1499 mm)
Lc =180 mm (OD: 1536 – 3065mm)

GRP Jacking Datasheet

CENTRIFUGAL CASTING (CC)

GLASS REINFORCED POLYESTER (GRP) ISO 25780

JOINT TYPE : FULLFACE GRP JACKING COUPLING

TABLE 8 GRP JACKING PIPE TABLE: SN 32 000 - 640 000

OD (mm)	PIPE STIFFNESS SN (N/m²)																							
	32 000				40 000				50 000				64 000				80 000				100 000			
	ID	e	Mass	F max	ID	e	Mass	F max	ID	e	Mass	F max	ID	e	Mass	F max	ID	e	Mass	F max	ID	e	Mass	F max
	mm	mm	kg / m	kN	mm	mm	kg / m	kN	mm	mm	kg / m	kN	mm	mm	kg / m	kN	mm	mm	kg / m	kN	mm	mm	kg / m	kN
427	X	X	X	X	X	X	X	X	393,6	16,7	40	164	391,4	17,8	42	195	388,8	19,1	46	232	386,0	20,5	49	272
530	X	X	X	X	491,6	19,2	57	298	489,2	20,4	61	341	486,0	22,0	66	397	482,8	23,6	71	454	479,4	25,3	76	513
616	574,8	20,6	71	408	571,6	22,2	77	475	568,6	23,7	83	537	565,0	25,5	89	611	561,4	27,3	96	685	557,2	29,4	104	770
718	670,4	23,8	97	636	666,6	25,7	105	728	663,0	27,5	113	815	658,8	29,6	122	916	654,4	31,8	131	1.021	649,4	34,3	142	1.140
820	765,8	27,1	128	863	761,6	29,2	139	980	757,4	31,3	149	1.096	752,4	33,8	162	1.233	747,2	36,4	174	1.375	741,6	39,2	188	1.526
924	863,2	30,4	160	1.114	858,4	32,8	173	1.264	853,6	35,2	186	1.414	848,0	38,0	202	1.587	842,4	40,8	218	1.759	836,0	44,0	235	1.954
1.026	959,0	33,5	196	1.460	953,8	36,1	212	1.641	948,4	38,8	229	1.827	942,0	42,0	248	2.047	935,6	45,2	268	2.266	928,8	48,6	288	2.496
1.229	1.149,2	39,9	280	2.300	1.143,2	42,9	302	2.550	1.136,8	46,1	326	2.815	1.129,4	49,8	353	3.120	1.121,6	53,7	382	3.439	X	X	X	X
1.434	1.341,8	46,1	379	3.309	1.334,6	49,7	409	3.659	1.327,2	53,4	442	4.017	X	X	X	X	X	X	X	X	X	X	X	X

OD (mm)	PIPE STIFFNESS SN (N/m²)																			
	128 000				160 000				200 000				320 000				640 000			
	ID	e	Mass	F max	ID	e	Mass	F max	ID	e	Mass	F max	ID	e	Mass	F max	ID	e	Mass	F max
	mm	mm	kg / m	kN	mm	mm	kg / m	kN	mm	mm	kg / m	kN	mm	mm	kg / m	kN	mm	mm	kg / m	kN
427	382,8	22,1	53	316	379,6	23,7	57	361	376,0	25,5	62	410	367,4	29,8	73	526	352,6	37,2	92	720
530	475,2	27,4	83	586	471,0	29,5	89	658	466,6	31,7	96	733	455,8	37,1	114	914	436,8	46,6	144	1.223
616	552,4	31,8	112	867	547,6	34,2	121	963	542,4	36,8	131	1.066	529,6	43,2	155	1.315	X	X	X	X
718	643,8	37,1	154	1.271	638,2	39,9	166	1.402	631,8	43,1	179	1.549	616,4	50,8	213	1.899	X	X	X	X
820	735,2	42,4	204	1.698	728,4	45,8	221	1.879	721,2	49,4	239	2.069	X	X	X	X	X	X	X	X
924	828,6	47,7	255	2.178	821,4	51,3	276	2.394	X	X	X	X	X	X	X	X	X	X	X	X
1.026	920,8	52,6	313	2.765	X	X	X	X	X	X	X	X	X	X	X	X	X	X	X	X
1.229	X	X	X	X	X	X	X	X	X	X	X	X	X	X	X	X	X	X	X	X
1.434	X	X	X	X	X	X	X	X	X	X	X	X	X	X	X	X	X	X	X	X

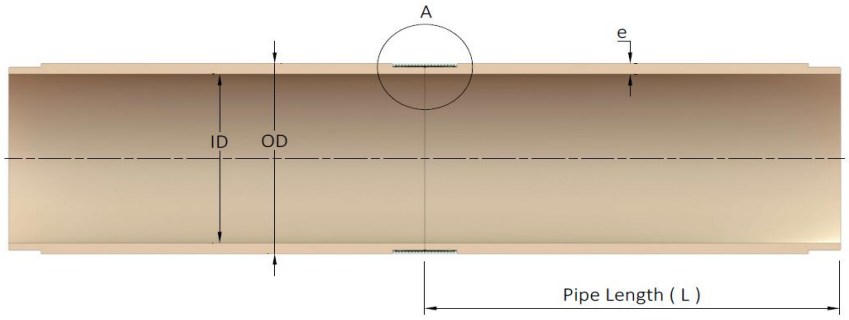

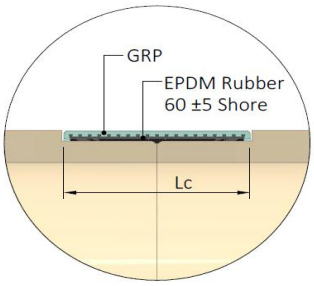

Detail A

Lc = 148 mm (OD: 427 – 1434 mm)

GRP Jacking Datasheet

CENTRIFUGAL CASTING (CC)

GLASS REINFORCED POLYESTER (GRP) ISO 25780

JOINT TYPE : FULLFACE STAINLESS STEEL JACKING COUPLING

TABLE 9 GRP JACKING PIPE TABLE: LOAD 250 - 500 TONS

JACKING LOAD Gj (tons)	OD (mm)	ID (mm)	e (mm)	SN (N/m²)
250	718	607,8	55,1	378.021
	820	723,0	48,5	174.646
	924	834,8	44,6	96.657
	1.026	944,4	40,8	54.821
	1.229	1.158,4	35,3	22.140
	1.434	1.371,0	31,5	10.087

JACKING LOAD Gj (tons)	OD (mm)	ID (mm)	e (mm)	SN (N/m²)
300	820	706,2	56,9	286.770
	924	820,2	51,9	151.754
	1.026	931,4	47,3	85.260
	1.229	1.147,8	40,6	33.132
	1.434	1.362,2	35,9	14.873

JACKING LOAD Gj (tons)	OD (mm)	ID (mm)	e (mm)	SN (N/m²)
400	1.229	1.126,6	51,2	74.745
	1.434	1.344,2	44,9	28.323

JACKING LOAD Gj (tons)	OD (mm)	ID (mm)	e (mm)	SN (N/m²)
500	1.434	1.326,0	54,0	47.981

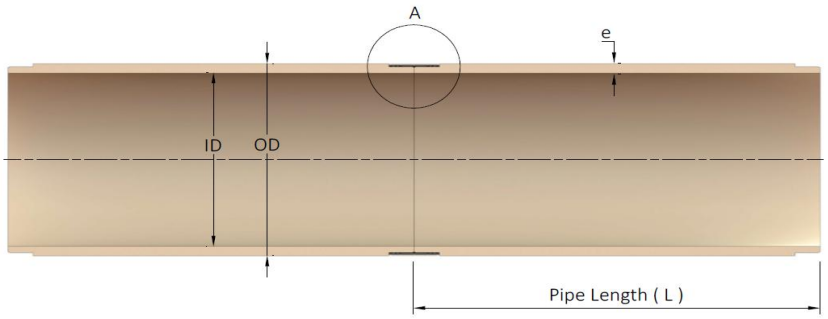

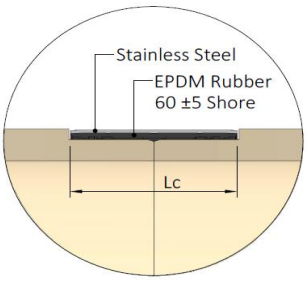

Detail A

Lc = 120 mm (OD: 427 – 820 mm)
Lc = 140 mm (OD: 924 – 1434 mm)

Intermediate Jacking Pipes (IJS)

Intermediate Jacking Stations (IJS) are placed between the main Jacking Station and the end of the pipeline on longer Micro Tunnelling pipe-drives. Should the main Jacking Station exceed its maximum thrust force, the IJS (usually installed mid-way of the Pipe-Drive) advances the leading pipe further forward using the additional hydraulic force provided, allowing longer Pipe-Drives to be completed.

The IJS includes:

- Leading Pipe
- Trailing Pipe
- Steel Cylinder (sometimes known as a CAN).

The CAN houses a series of hydraulic jacking cylinders, the IJS is normally assembled on the surface, lowered into the launch shaft at grade and placed in a pre-planned position within the pipes to be installed.

Superlit® has their own Leading and Trailing Pipe designs, these are based upon use with Herreknecht® Tunnel Boring Machines (TBM). Superlit® GRP Trailing and Leading Pipes can be manufactured to suit other TBM equipment.

Grout and Lubricating Ports

Grout and Lubricating Ports can be installed into the pipes at the time of manufacture to suit the Contractors requirements.

The following should be nominated:

- Quantity
- Location
- Orientation

Typical Grout and Lubricating Ports consist of a SS connector, non-return valve and sealing cap.

For further technical support with Micro-Tunnelling and Jacking with GRP pipes please contact the Hynds Flexible Pipe Technical Team.

Handling, Transportation and Storage

While transporting, loading and, unloading GRP pipes and fittings on site, care should be exercised to avoid any damage. The following points should be considered during operations:

- Identify lifting points and methods
- Use safe handling methods for loading and unloading
- A spotter is required to observe loading and unloading of pipe
- Report any damage that has occurred.

Damaged pipes should not be installed unless inspected, repaired and/or approved for use by a qualified Superlit® GRP repair agent.

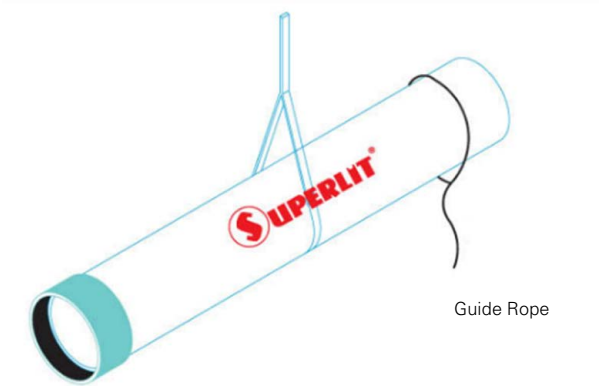

FIG. 8 Lifting GRP pipe with a nylon sling and guide rope

Handling

Pipes can be lifted with either one or two nylon lifting slings. However, for an easier balancing control two nylon lifting slings are recommended (refer to Figure 9). A guide rope should be used to manoeuvrer the pipe into position (refer to Figure 8 & 9). Guide ropes should be a sufficient length to maintain a safe working distance from the pipe.

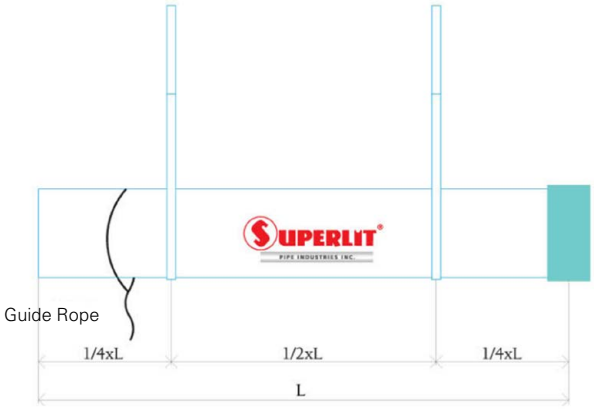

FIG. 9 Use of two nylon slings and guide rope.

Storage on Site

The storage area should be flat and clear of sharp objects (rocks, stones and waste timber). Pipes <1200 can be stacked up to a height of 2.5m to minimise site storage space. Pipes shall be placed on timber dunnage or wooden cradles to avoid movement in strong wind locations. Each pipe layer is stacked on timber dunnage, and the first and last pipe in each row shall be chocked with wooden wedges. Dunnage shall be placed at a-distance of ¼ of the pipe length in from each pipe-end, the storage laydown area shall be resistant to heavy loads. A compacted aggregate base maybe be prepared for weaker ground locations.

FIG. 10 Stacked pipe (DN600) stored on timber dunnage and fittings stored in timber crate

FIG. 11 Large diameter pipes stored on site on timber dunnage

These instructions shall be read in conjunction with Superlit's GRP Pipe Installation Manual which can be found at:

https://www.superlit.com/wp/wp-content/uploads/2017/07/en-grp-pipe-installation-manual.pdf

or contact Hynds Pipe Systems Flexible Pipe Technical Team.

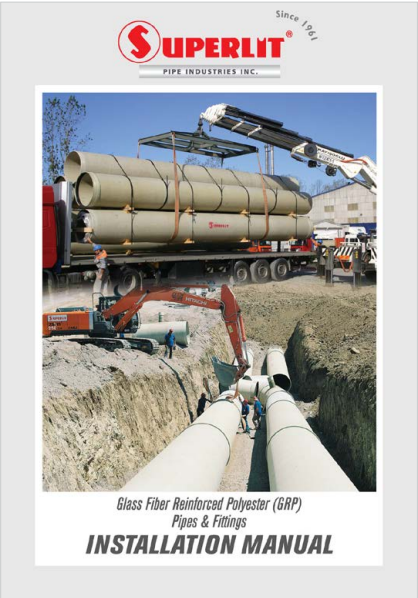

Branches Nationwide *Support Office & Technical Services 0800 93 7473*

Disclaimer: While every effort has been made to ensure that the information in this document is correct and accurate, users of Hynds product or information within this document must make their own assessment of suitability for their particular application. Product dimensions are nominal only, and should be verified if critical to a particular installation. No warranty is either expressed, implied, or statutory made by Hynds unless expressly stated in any sale and purchase agreement entered into between Hynds and the user.